PROFINEWS

PROFIBUS & PROFINET news from around the world

Table Of Contents

The Importance of Open Standards

by Michael Bowne - Tuesday, May 30, 2017

http://profinews.com/2017/05/the-importance-of-open-standards/

As the data from factories scales exponentially, the ability to access that data transparently becomes critical. If we want the Industrial Internet of Things to truly be a game changer for the manufacturing industry, open standards will be a major enabler of that transformation.

Where open standards exist, innovation is driven; disruptive technologies emerge. Things become more valuable, smarter, and easier to use. This pattern has been shown time and time again in almost every industry on the planet. The examples are endless. Open standards foster a broad selection of products and vendors for end users to choose from. This competition is what drives innovation. More importantly, open standards allow small and medium-sized companies to compete. Disruptive technologies often emerge from such companies that are agile enough to innovate based on open standards. At the end of the day, the end user wins by not being locked into one large company's method of doing business.

What exactly is an open standard?

The world of open standards is an alphabet soup of organizations, consortia and institutes. In some industries, there is disagreement about what an open standard even means. For our purposes, IEEE, Internet Society (ISOC), World Wide Web Consortium (W3C), Internet Engineering Task Force (IETF) and Internet Architecture Board (IAB) have jointly affirmed these five principles of open standards:

- Cooperation
- Adherence to principles
- Collective empowerment
- Availability
- Voluntary adoption

Cooperation

We at Profibus and Profinet International (PI) have long promoted cooperation among standards organizations. For example, in 2007, we initiated a Wireless Cooperation Team that included Fieldbus Foundation (FF) and HART Communication Foundation. The goal was to avoid creating a PI-specific or FF-specific wireless technology for process applications and instead provide a unified approach benefitting end users. Also in 2007, PI, FF, FDT Group and the OPC Foundation formed a team to unify an approach combining electronic device descriptions (EDDs) and field device tools (FDTs) into a common technology. This became the FDI Cooperation; in 2015 FDI finished its work with PI and FieldComm Group cooperating to provide the resultant standard.

Adherence to principles

There are certain principles a standard should follow to affirm its openness. Basically, it all comes down

to transparency. Consensus about decisions should be as broad as possible. The process by which decisions are made among participants should be well-defined, including the opportunities to appeal. Records should be kept throughout the process. We at PI observe these guidelines through an extensive Call for Experts process where all members equally provide input. Our technical standards are developed in PI Working Groups, the processes and guidelines for which are published online.

Collective empowerment

Organizations should create standards that are chosen based on technical merit, provide global interoperability, enable competition and innovation, and contribute to the creation of global communities. PI is a uniquely global organization in that it is highly decentralized. Regional PI Associations (RPAs) exist in dozens of countries, and are completely independent. However, membership anywhere in the world entitles participation in the standardization processes noted above. Competence centers, training centers and test labs all create an ecosystem in which the technologies can thrive.

Availability

Organizations define procedures to develop specifications that can be implemented under fair terms. That might mean open source, where licensing agreements are employed. Or it could mean royalty-free. In other cases, they might follow FRAND (fair, reasonable, and non-discriminatory) terms. The Profibus and Profinet standards are available to all from the International Electrotechnical Commission (IEC). Patents cover some PI technologies, but we make them available per FRAND guidelines. Note: It is not uncommon for even IEEE specifications to be covered by patents; for example, IEEE 1588 uses patents from Intel.

Voluntary adoption

For a standard to be truly open, the market—where adoption is voluntary—must determine its success. We are very proud of the adoption of Profibus. It is far and away the most installed fieldbus on the market. The industrial automation market was free to choose its network during the fieldbus wars of the 1990s. That choice is now clear. We expect Profinet to see the same adoption that Profibus did. In fact, 2015 was the first year more Profinet nodes were installed than Profibus nodes. And it’s not as if Profibus is going away, it’s just that users are adopting industrial Ethernet and Profinet at an exponential clip.

S-curves

If you are familiar with innovation, you have probably heard of S-curves. This is the concept that, as a technology matures, it slowly provides more value and then quickly accelerates up a hockey-stick growth path before leveling off. Meanwhile another disruptive technology is lurking behind the scenes that, initially, doesn’t provide as much value as the current state of the art. This is the case until that new disruptive technology undergoes its own exponential growth and becomes the new standard. This type of innovation is impossible without open standards.

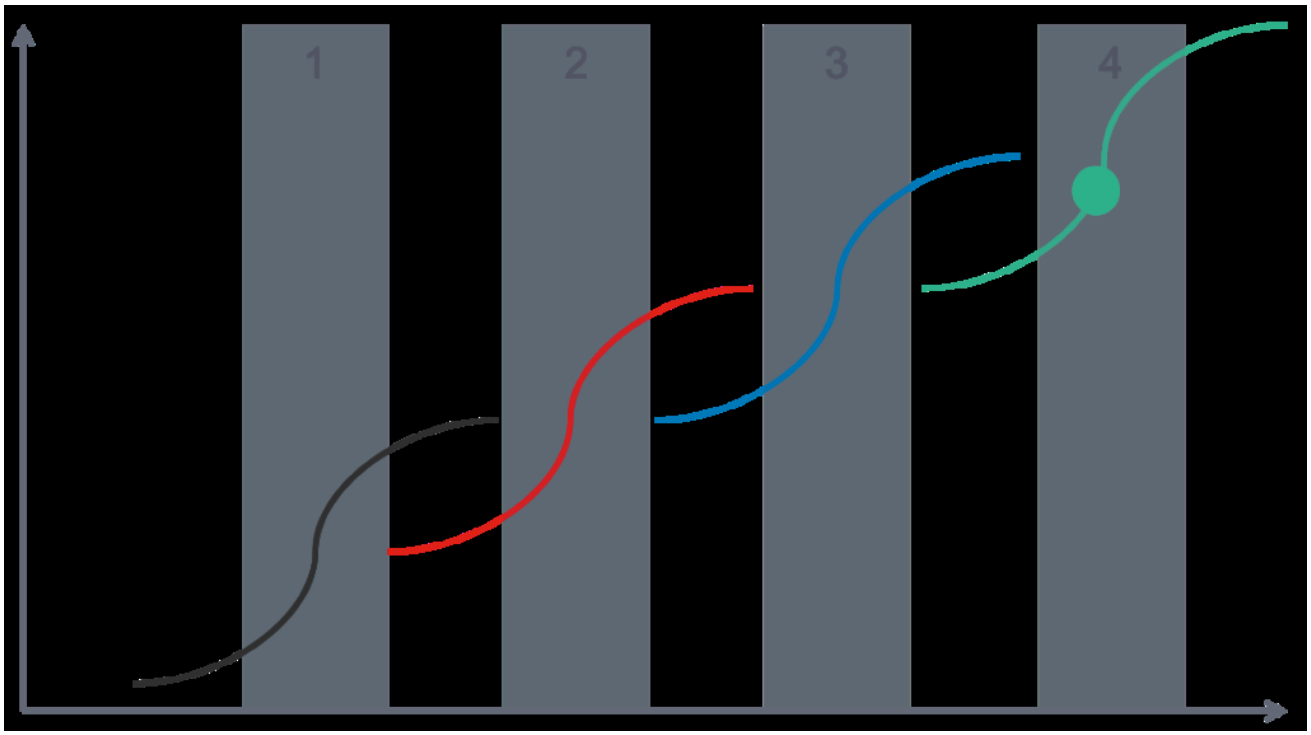

This is exactly the kind of innovation we are seeing in the Industrial Internet of Things (IIoT) space. In the context of Industrie 4.0, this path becomes even clearer. The first industrial revolution was driven by hydraulics and pneumatics. The second saw networking via electrical signals. In the third, we see the rise of digital communication. Now, in the fourth industrial revolution, analytics and Big Data collected via increased connectivity are being driven by open standards.

This article first appeared in Automation World magazine.

Six Steps to IIoT

by Carl Henning - Tuesday, May 30, 2017

http://profinews.com/2017/05/six-steps-to-iiot/

A recent magazine article outlined six steps to take to implement the Industrial Internet of Things (IIoT). It was mostly political – form a team, get buy-in from a C-level executive, etc. The political approach may be valuable, but for engineers the steps are different. So here are the six technical steps to the IIoT.

1. Educate yourself. What is IIoT? Relate it to automation.

IIoT is a part of both the Internet of Things and Industrie 4.0. This diagram shows the relationship:

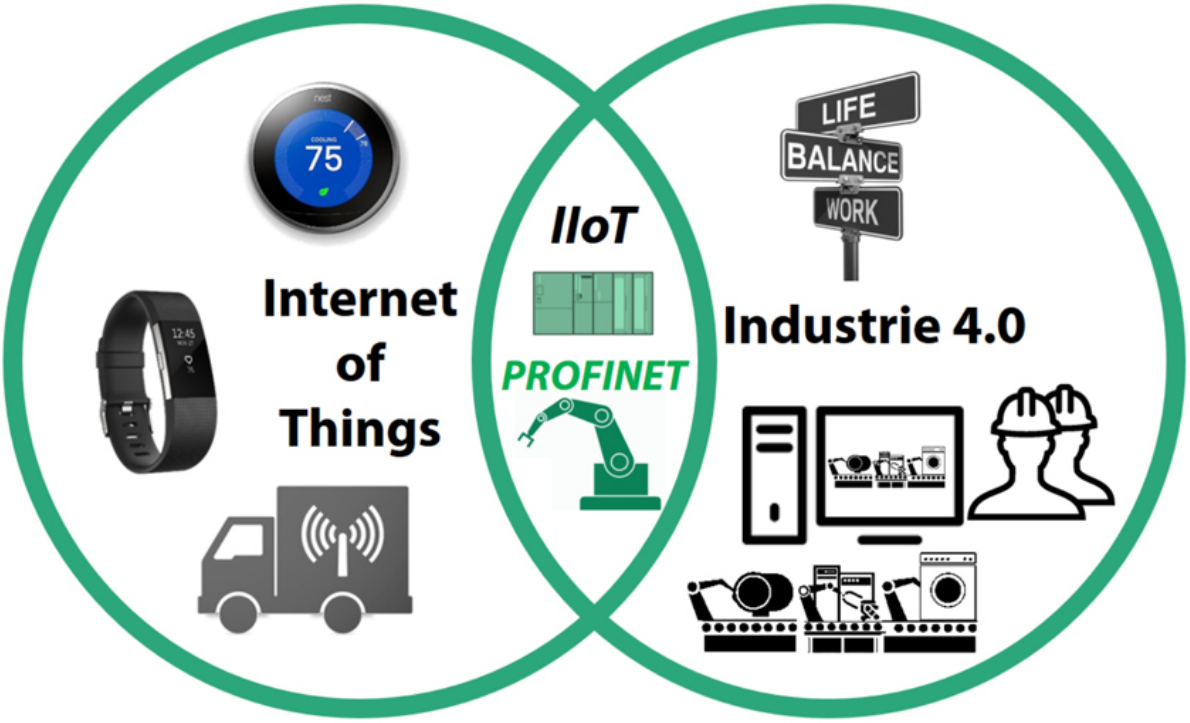

IIoT can be defined this way: IIoT involves interconnecting devices, moving their data to a database (possibly in the cloud), then analyzing that data to discover process savings or to predict and avoid downtime.

2. Assess your plant's level of automation

Do you have devices on older, non-Ethernet networks? That's ok; PROFINET provides proxies to integrate them into PROFINET. From there, their data can travel to the cloud and analytic packages where the money-making magic of IIoT happens. Many networks can be integrated into PROFINET: PROFIBUS, DeviceNet, Interbus, IO-Link, AS-interface, HART, Foundation Fieldbus, and many more.

And in keeping with IIoT's emphasis on open standards, proxies are defined in the open PROFINET standard.

3. Mind the gap. What is my facility lacking? Where am I short of IIoT?

You probably are missing data storage and analytics, but all the major automation suppliers can provide these as a service. This service is not trivial, but they all depend on getting the required data. That's where PROFINET comes in. If you don't have an Industrial Ethernet, plan to add PROFINET. That's where the needed data will come from, even data from older serial fieldbuses.

4. Plan the upgrade. (Here's where the politics come in. Or the "show me the money" comes in.) An ROI is required.

Justify the project with whatever your local company politics require.

PI will help you in this phase with a Design guideline, Installation guideline, Commissioning guideline, and Security guideline. We offer many avenues to educate yourself for this phase: free classes; week-long in-depth classes; webinars; newsletters; videos; and documentation. Browse us.profinet.com for all of these.

5. Implement and commission.

The aforementioned guidelines will help. But if you need help from people, look for PROFINET Certified Network Engineers (or become one). PI Training Centers are accredited by PI, as are PI Competence Centers. PI is the only fieldbus/Industrial Ethernet organization that has accredited competence centers that provide assistance. There are over 50 of these around the world. If you get stuck, call them.

6. Monitor.

Commissioning is just the beginning. Your production system will be around for many years. PROFINET helps you keep the lines running. Redundant media, controllers, and devices keep any one failure from shutting you down. And PROFINET's diagnostics are comprehensive; helping you when something breaks and helping you prevent a breakdown from occurring.

IO-Link Community Japan

by Carl Henning - Tuesday, May 30, 2017

http://profinews.com/2017/05/io-link-community-japan/

Start of "IO-Link Community Japan" and the regular seminar "IO-Link experience course" at Waseda University

IO-Link Community Japan (Leader: Mr. Shinichi Motoyoshi; Chairman of PI Japan) announces the start of IO-Link Community Japan in April 2017 to promote the industrial digital communication technology, IO-Link, based on IEC61131-9. And it also starts the "IO-Link experience course" from June 2017 at Industrial Open-Network Laboratory of Research Institute for Science and Engineering in Waseda University, as one of the field communication seminars.

Recently the demand for the digital communication technology in the factory floor has been increasing based on the request for Industrial Internet of Things (IIoT) and Industrie 4.0.

On the factory floor, the digital communication technology called fieldbus was introduced in the 1990's. After 2000, Industrial Ethernet was proposed. Thus, the control data and the management data on the factory floor can be accessed more quickly, more easily, and with more flexibility.

However, the intelligence and performance required for factory floor devices require the addition of fieldbus and Industrial Ethernet. Because of that expense, most sensors and actuators which are relatively inexpensive and work at the bottom layer of the factory, did not have communication capability.

The number of sensors and actuators in the factory is very large. Without digital communication to sensors and actuators it is hard to represent IIoT and Industrie 4.0. The sensor and actuator data is not available.

IO-Link was introduced in 2005 in Germany, and it adds the communication capability to sensors and actuators with little cost increase. IO-Link is the international standard, IEC61131-9, and has over 5.4 million nodes shipped globally through 2016.

IO-Link connects sensors and actuators to the upper fieldbus and Industrial Ethernet layers. Currently many fieldbuses (including CC-Link, DeviceNet, and PROFIBUS), and many Industrial Ethernets (like CC-Link/OE, EtherCAT, EtherNet/IP, Modbus/TCP, Powerlink, PROFINET, and Sercos) have an interface to IO-Link.

In Germany, the IO-Link Community was formed within PI and works to develop and promote the technology. More than 20 companies from Japan have joined the IO-Link Community in Germany.

Because of this interest, IO-Link Community Japan has been established in April 2017 to promote IO-Link technology in Japan.

Industrial Open-Network Laboratory of Research Institute for Science and Engineering in Waseda University has held network seminars for process automation for years. Now it will start the “IO-Link experience course” beginning in June 2016. Therefore, it can contribute to a broader range of industrial automation.

Mr. Motoyoshi, leader of IO-Link Community Japan, said “We understand the request of IO-Link in the Japanese users is increasing now. With the start of the IO-Link Community Japan, users can access IO-Link technology more easily. That would support the expansion of IO-Link in Japan.”

If you have any questions, please contact IO-Link Community Japan: info@io-link.jp

The twenty members of IO-Link Community Japan are:

- B&PLUS KK
- Balluff Co., Ltd.
- Contrinex Japan K.K.
- Hilscher Japan KK
- HYDAC Japan Corporation
- IBS Japan Co., Ltd.
- ifm efector co., ltd.
- JSL Technology Co.,Ltd.
- K.MECS Co., Ltd.
- Maxim integrated
- Molex Japan
- OMRON Corporation
- Panasonic Industrial Devices SUNX Co., Ltd.
- Pepperl+Fuchs K.K.
- Phoenix Contact K.K.
- SICK K.K.
- Siemens K.K.
- SMC Corp.
- TJ Group Corporation
- TURCK Japan Corporation

IO Link: Did You Know

by Carl Henning - Tuesday, May 30, 2017

http://profinews.com/2017/05/io-link-did-you-know-20/

Did You Know that New Options for Diagnostics Are Available?
IO-Link now makes it possible to transfer larger data volumes

Previously, if larger data volumes had to be read out from IO-Link devices, e.g. for diagnostic purposes, such as images from optical sensors or long-term progressions, this was only possible through proprietary means. The BLOB (Binary Large Object) profile developed by the IO-Link community now provides an option for segmenting the larger data volumes and then transferring them through the existing ISDU (Indexed Service Data Unit) communication mechanism in a controlled manner. This involves standardized transfer of large data volumes (typically several kilobytes), so-called BLOBs , from the IO-Link device to a host controller or vice versa (bidirectionally). The host controller can be a PLC or computer tool, for example.

The trick is that IO-Link is used here “only” as a data channel. The actual segmentation and flow control takes place in the device, or in the PLC or the PC program. The great advantage of this is that the IO-Link master and the field level are not affected. This means that no modification of the existing system is necessary, and devices that support BLOB transfer can be connected to any existing IO-Link application.

On the host side, the BLOB process can be implemented in a function block for the PLC, for example. This makes sense especially if the PLC program requires the data for further processing, e.g. when reading out RFID tags with IO-Link RIFD readers or reading out collected protocol information from a device for diagnosis. If the data is to be used only for service purposes, it can also be read or written via a normal USB master and special software, for example.

This creates options for reading even large data packages, such as can arise in image recognition, from the final meters in the field for detailed data analysis. This is a further critical step for future Industrie 4.0 applications.

PROFINET Conference in Denmark

by Carl Henning - Tuesday, May 30, 2017

http://profinews.com/2017/05/profinet-conference-in-denmark/

PI Denmark conducted a special conference on May 18, 2017 with Chairman Karsten Schneider as key speaker on the subject "PROFINET and IO-Link - Communication Technology for Industrie 4.0."

About 30 participants received an introduction to where PROFINET is today and where the technology is headed. Karsten Schneider's lecture was also a confirmation that the PROFINET profile is not locked, and participants got a little peek into the future development trend.

IO-Link is internationally strong with 47% growth from 2015 to 2016. PI (PROFIBUS & PROFINET International) has been responsible for the administration and marketing of IO-Link from its beginning. The serial IO-Link sensors are applicable in the lower layer of the automation pyramid, and the advantage of the use is that in addition to the digital signal, technology allows additional information about parameters like operating hours or maintenance mode.

Jørn Poulsen, CEO of ifm in Denmark, presented the technological details and characteristics of both IO-Link sensors and actuators as well as for master modules. It was also interesting to see the user cases that Jørn Poulsen concluded with his presentation.

The conference ended with a company visit to Automate in Silkeborg, where the participants were given the opportunity to see something special - a complete dairy for teaching purposes only – named Automate Academy (see the article New Dairy in Silkeborg - But without Milk). CEO Klaus Dam initiated the visit with a presentation of Automate and continued to give us an insight into the strategic thinking that is the basis of the dairy project. Afterwards he showed us around the well-organized company and we ended up in the dairy where we got the technical review. As in Automate's automation projects all over the world, PROFINET and PROFIBUS have been used for communication in the teaching dairy.

New Dairy in Silkeborg - But without Milk

by Carl Henning - Tuesday, May 30, 2017

http://profinews.com/2017/05/new-dairy-in-silkeborg-but-without-milk/

Instead of milk, the small dairy simply processes water. The finished product is not going to be used for anything at all, but will just go down the drain once it has been through the process. And what is the point of that? Well, whether the dairy processes water or milk, the process is exactly the same, and this dairy has been established solely for the purpose of training the company's customers, so it is actually quite logical.

The automation of dairies is our main competence

The new 'dairy' has been built at Automate, a company that specializes in the automation of dairy and other process-oriented plants in the food industry.

In addition to supplying automation, Automate also offers to lead projects. And now there is an additional skill on offer, namely training at the Automate Academy as the mini-dairy is called. A room next to the

dairy has been set up as a classroom for 10 students, each with their own PC screen.

The need for customer training

The processing facility incorporating line control consists of raw material reception, storage, pasteurization, buffer tanks, delivery/filling, and clean-in-place (CIP) system. The facility has been built in mini-scale, but to full industrial standards, and all instrumentation (PLC, SCADA & MES) is up to industry standards and best practice, e.g. S88 and S95.

Carsten G. Jensen, Technical director

Technical director, Carsten G. Jensen, explains, “The management of a dairy has three requirements that must be met: reliability, reliability, and reliability! And that is where our courses come into the picture. Because we can train the dairy operators how to use the equipment correctly, and at this facility the consequences of an operator error are not so serious. In the event of a fault, the dairy’s service technicians must be familiar with the equipment and be able to use the diagnostic tools effectively to find and fix the fault. That is why a training facility like this must be able to relate to the real world”.

The technical side

Carsten G. Jensen continues, “The automation of the training dairy has been designed in exactly the same way as we do it at real production dairies. We have a Wonderware SCADA-system platform, Siemens and Allen Bradley PLC controllers, HMI panels and IO slaves, and frequency transformers from Danfoss, Siemens, and Allen Bradley. The processing instrumentation is also from several different suppliers, because we make a point of training customers on the very same equipment as they have at their own dairy.”

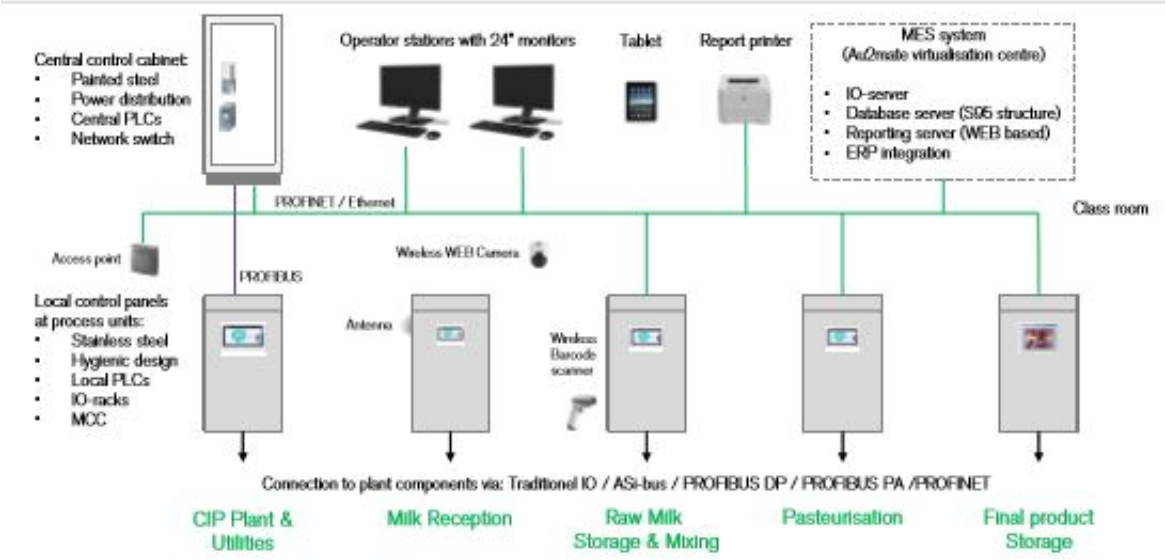

Communication

Purple for PROFIBUS DP, green for PROFINET, and yellow for AS-i cables clearly distinguish the networks, which reduces the risk of error if a change is needed.

Fieldbuses and communication nets are becoming more and more important in any large system. It is particularly important that networks are robust and reliable. They can and must help maintain a high uptime in the system. A modern network must be able to use any relevant medium: copper cable, optical fiber, wireless, or radio.

These requirements are met by the fieldbuses and network used at the training facility and by Automate in automation projects.

The fieldbuses used at the training facility are PROFINET, PROFIBUS DP, and PROFIBUS PA. AS-i buses are also used, for example to control on/off valves.

Communication between the five independent modules that make up the dairy and the user stations and HMI panels is carried out by PROFINET copper cable or PROFINET wireless.

Many-sided use of the dairy

Carsten G. Jensen adds, “We have trained a lot of people from our customers at home and abroad since we opened the Automate Academy in the spring of 2016. But we also use the dairy in sales presentations, where we can simply show a customer a complex function, which might otherwise take a lot of explaining and still be difficult for the customer to understand.”

“We also use the dairy to train our own employees, of course, and it has been used by students from Aarhus University School of Engineering for examination projects in regulating machinery. It has been a significant investment to construct such a dairy for training, but it has already shown itself to have been a good investment.”

IO-Link Sensors in Tire Manufacturing

by Carl Henning - Tuesday, May 30, 2017

http://profinews.com/2017/05/io-link-sensors-in-tire-manufacturing/

Tire manufacturing machinery in general, and tire curing presses in particular, incorporate numerous sensors and indicators that contribute to machine efficiency.

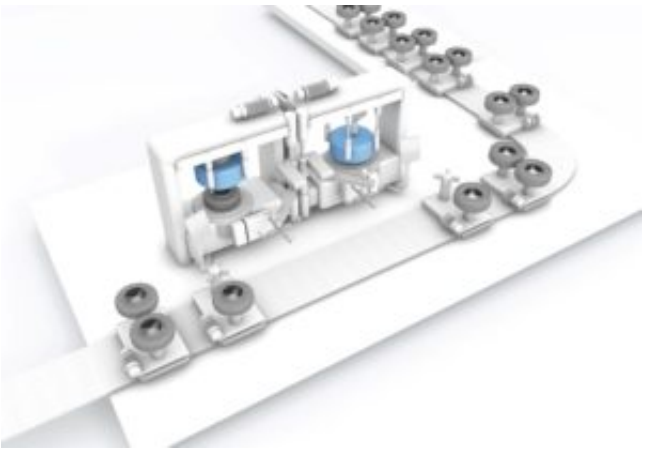

As an example, tire curing presses often use magnetostrictive linear position sensors for feedback and control of mold open/close. Overwhelmingly, sensors that provide an analog, 4-20 mA signal are used. But maybe there's a better alternative to typical analog feedback.

Migration away from typical analog sensor signals to network-capable IO-Link interfaces makes a great deal of sense in many areas of application.

In a tire manufacturing operation, there are typically numerous, essentially identical curing presses, lined up in a row, all doing essentially the same job. Each press uses multiple analog position sensors that need each need to be connected to the press control system. As with pretty much any analog device, the use of individual shielded cables is critical. Individual shielded cables for every sensor is a costly and time-consuming proposition. An Engineering Manager at a machine builder said recently that wiring each press requires around 300 man hours, a significant portion of which is spent on sensor and indicator wiring.

Which brings us to IO-Link. Replacing those analog sensors with IO-Link sensors, allows feedback signals from multiple

machines to be consolidated into single cable runs and

connected to the Profinet network. The benefits of such an approach are numerous:

- Wiring is simple and much more economical
- Eliminates need for shielded sensor cables
- Integrated diagnostics allow remote machine status monitoring
- Reduces more expensive analog IO on the controller side
- Over-the-network configuration and the ability to store those configurations reduces setup time

And, by the way, the IO-Link story doesn't end with position sensors. The ever-growing list of IO-Link enabled sensors and indicators allows the benefits to be rolled into many areas of machine automation, such as:

- Intelligent IO-Link power supplies with HeartBeat technology that monitor their own "health" and report it back over the network (think Predictive Maintenance)
- Highly-configurable IO-Link stack light alternatives that can be set up to display a number of machine and process condition states
- IO blocks, memory modules, pressure sensors, discrete (on/off) sensors of all type, and more

Article provided by Balluff from their SensorTech blog.

Tech Tip: Designing for Available Bandwidth

by Carl Henning - Tuesday, May 30, 2017

http://profinews.com/2017/05/tech-tip-designing-for-available-bandwidth/

A frequently expressed concern of PROFINET users is bandwidth. Is there enough? How can I be sure?

This is a legitimate concern, prompting a reminder that there's never a substitute for doing the engineering. Architect the system with bandwidth usage in mind. PROFINET messages tend to be small. But topology should be designed to minimize the chance of using too much bandwidth.

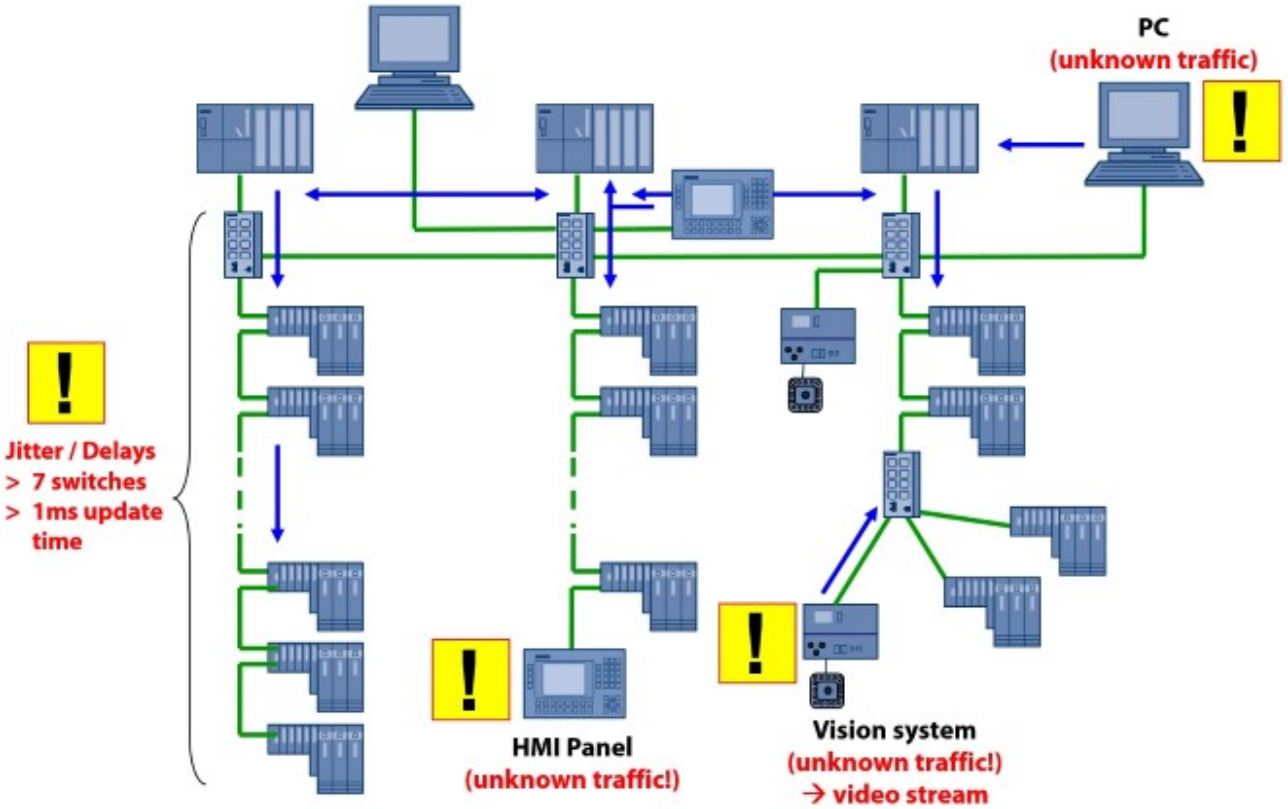

PROFINET supports many topologies: star, tree, line, ring, wired, and wireless. When using line topology remember that each device includes a switch which will introduce a small amount of latency. Placing a bandwidth-intensive device at the end of the line could result in excess bandwidth issues on the line.

PI offers a design guideline that includes a bandwidth calculation tool. This document will help the user through good design practices. It's an excellent starting point in the design process.

So, you used the design guideline. You designed your network correctly, but stuff happens -unexpected stuff. For example: network floods. A device starts pumping out Ethernet frames. Maybe an unexpected non-PROFINET device is added to the network. Here's how to anticipate and prevent the problem. Ethernet switches (even those in PROFINET devices) offer standard IT features that you can use. One

feature is Simple Network Management Protocol (SNMP). SNMP can be used to read switch information like disconnected cable or excessive retries. Therefore you can include some screens in the HMI to track and alarm these errors.

And if you positively have to make sure that there's bandwidth for your I/O messages, PROFINET does that too. Some PROFINET controllers and devices support bandwidth reservation. It's part of PROFINET Isochronous Real Time (IRT). To give you an idea of how that works, check out this video of IRT in a drive application:

YouTube Video

There's never a substitute for doing the engineering. Use the design guideline to set your network topology. Use the diagnostic power of SNMP to alert on network problems.

For further study on PROFINET diagnostics like using SNMP:

Webinar: Diagnostics for PROFINET and Industrial Ethernet

InTech magazine article: Profibus and Profinet troubleshooting

For an explanation of SNMP and other IT protocols as they relate to PROFINET: PROFINET and IT Protocols

Training and Events - June 2017

by Carl Henning - Tuesday, May 30, 2017

http://profinews.com/2017/05/training-and-events-june-2017/

PI Germany held their largest ever IO-Link Workshop. PI Middle East has just completed a series of PROFIBUS and PROFINET certification training classes throughout the Middle East with a class on Food and Bev scheduled for September. PI UK has free PROFIBUS, PROFINET, and IO-Link classes scheduled for the fall. PI North America continues its free PROFINET one-day training classes with a total of 17 to be completed in 2017. PI has scheduled a PROFIsafe Certified Designer Training for October 10 - 12, 2017.

PI Germany IO-Link Workshop

On March 23 the biggest IO-Link workshop so far was held near Stuttgart, Germany. More than 100 visitors attended and had the chance to visit a microfair with 19 exhibitors showing their products and services. The lectures were split into parallel sessions. The participants could choose between advantages and technology, depending on their interest.

PI Middle East

Classes completed in May and early June included:

- PROFIBUS Maintenance & Troubleshooting
- Certified PROFIBUS Engineer
- Certified PROFIBUS Installer
- PROFINET Maintenance & Troubleshooting
- Certified PROFINET Engineer

AUTOMATION DAY in F&B Riyadh is scheduled for September 6. Details here.

PI UK Announces PROFIBUS, PROFINET and IO-Link Autumn Training Days

The two new free training events:

- Glyndwr University, Wales, 26 September
- Cambridge, 11 October

These free-to-attend seminars will address the key practical issues arising from the use of digital communications technologies in automated manufacturing and process industry applications, with

particular attention to the Industrial Internet of Things (IIoT) and Industrie 4.0.

Covering key application areas such as mechanical handling and logistics, robotics, automotive engineering, electrical and electronics assembly, control systems and energy management, pulp and paper, chemical, utilities, pharmaceutical, packaging, and printing, they focus on the practical aspects of using PROFIBUS, PROFINET, and IO-Link, from system design and safety considerations through to fault-finding and maintenance.

Supported by demonstrations of actual tools used in configuration and maintenance, these seminars will be of great value to Designers, Production/System Engineers, Instrument Technicians/Engineers, and C&I Engineers involved in the design, operation and maintenance of modern automated factories and process plant.

To register click here, where you will also find a list of other upcoming training classes.

PI North America

PI North America's free PROFINET one-day training classes continue with a lighter schedule through the summer, then go full force in the fall (click a city for details and registration):

Minneapolis	Thursday, Jun 15, 2017	Register
Toronto	Thursday, Jul 13, 2017	Register
NY / NJ	Tuesday, Aug 29, 2017	Register
Grand Rapids	Wednesday, Sep 13, 2017	Register
Silicon Valley	Thursday, Oct 05, 2017	Register
Houston	Thursday, Oct 19, 2017	Register
Greenville	Wednesday, Nov 01, 2017	Register
Dallas	TBD	

The PROFI Interface Center and PI North America also jointly present PROFINET and PROFIBUS Certified Network Engineer training. See the schedule here.

PI in Germany

The next PROFIsafe Certified Designer Training takes place on October 10 - 12, 2017 in Karlsruhe/Germany. The training is held in English language and is developed from PI together with the TÜV. It is available to all individuals in charge of PROFIsafe and safety. This three days session includes a written test at the end of each day. Experts having passed all tests will receive a TÜV certificate ‘Certified PROFIsafe Designer.’ Further information here.

The certificates are valid three years. After this time the Certified PROFIsafe Designer can refresh his knowhow. The Refresher Training this year for the first time is an online meeting to be held on October 5, 2017. For detailed information click here.

Rest of the World

See the full list and filter by your region and interest.

Product News - June 2017

by Carl Henning - Tuesday, May 30, 2017

http://profinews.com/2017/05/product-news-june-2017/

Moxa launches smart switches in a compact size with intuitive configuration. Siemens extends its line of IO-Link RFID Readers. Phoenix Contact adds new versions of its managed switches.

Moxa PROFINET Ethernet Switch Line

Moxa launches its SDS-3008 smart switch, a new product line within its industrial Ethernet switch family. The smart switches offer an intuitive one-page dashboard, which allows users to activate pre-configured protocols (including PROFINET) in one click, simplifying HMI/SCADA integration. With the compact size and flexible mounting design, the smart switch allows the highest installation flexibility.

Siemens IO-Link RFID Readers

Siemens is extending its RFID (Radio Frequency Identification) system Simatic RF200 to include readers in compliance with IO-Link Standard V1.1. The read/write speed of the new

devices is more than ten times higher than the existing series. The new readers come with a high degree of protection, compact design, and a rugged technical set-up, which makes them ideally suited for use in harsh industrial environments and for integration in applications with tight installation spaces.

Phoenix Contact Ethernet Switch

Phoenix Contact is extending its range of managed switches for automation tasks with new versions 2200 and 2300 in the FL Switch 2000 product range. They are suitable for the flexible construction of robust and failsafe networks in systems manufacturing, in the infrastructure and process industry, as well as in maritime applications. The switches have the necessary management functions for PROFINET applications.

PROFINEWS

PROFIBUS & PROFINET news from around the world